Development 122, 2507-2515 (1996)
Printed in Great Britain © The Company of Biologists Limited 1996
DEV9460

Reversal of cell fate determination in *Caenorhabditis elegans* vulval development

Susan Euling† and Victor Ambros*

Biological Sciences, Dartmouth College, Hanover, NH 03755, USA and Department of Cellular and Developmental Biology, Harvard University, Cambridge, MA 01238, USA

*Author for correspondence at present address: Biological Sciences, Dartmouth College, Hanover, NH 03755, USA
†Present address: Genetics and Cell Biology, University of Minnesota, St. Paul, MN 55108, USA

SUMMARY

In *Caenorhabditis elegans*, the fates of the multipotent vulval precursor cells (VPCs) are specified by intercellular signals. The VPCs divide in the third larval stage (L3) of the wild type, producing progeny of determined cell types. In *lin-28* mutants, vulva development is similar to wild-type vulva development except that it occurs precociously, in the second larval stage (L2). Consequently, when *lin-28* hermaphrodites temporarily arrest development at the end of L2 in the dauer larva stage, they have partially developed vulvae consisting of VPC progeny. During post-dauer development, these otherwise determined VPC progeny become reprogrammed back to the multipotent, signal-sensitive state of VPCs. Our results indicate that VPC fate determination by intercellular signals is reversible by dauer larva developmental arrest and post-dauer development.

Key words: dauer larva, vulva, determination, heterochronic genes

INTRODUCTION

Multicellular development involves numerous regulatory events whereby multipotent cells adopt specific fates. The precise mechanisms by which cells are endowed with a defined set of potential fates, and the regulatory steps by which those cells are directed toward a particular differentiated fate, are not well understood. A multipotent cell that responds to intercellular signals can become irreversibly determined by those signals, such that its fate is unaltered by subsequent experimental manipulation of its environment (Slack, 1983). However, since it is not always possible to exert complete control of a cell's environment, cells that appear determined with respect to a particular developmental signal could harbor cryptic potentiality that would be revealed if the cell were placed in a different temporal and/or spatial context. Understanding the mechanisms of cell fate determination in multipotent cells requires characterization of all the regulatory steps leading from a multipotent, undetermined state, through the transduction and implementation of developmental signals, and finally to the differentiation of specific cell types. The identification of reversible steps in the process of cell fate restriction would reveal intermediate regulatory steps between multipotency and terminal differentiation.

Vulval development in *C. elegans* is an excellent system for the analysis of signal transduction, cell fate determination and differentiation. The six vulval precursor cells (VPCs) are born in the first larval stage (L1) and divide approximately 20 hours later at a precise time in the L3 stage (Fig. 1A). All six VPCs have the potential to express any one of three different fates, defined by the number and type of progeny that they eventually produce. The fate of a VPC depends on intercellular signals, including a gonadal inductive signal (Sulston and White, 1980; Kimble, 1981), an inhibitory signal from the surrounding hypodermis (Herman and Hedgecock, 1990) and a lateral signal from neighboring VPCs (Sternberg, 1988; Sternberg and Horvitz, 1989). The VPCs implement these signals and adopt a specific vulval fate at approximately the L2 molt and early L3 (Sternberg and Horvitz, 1986; Greenwald et al., 1983; Ferguson et al., 1987). The daughters of the VPCs appear to be irreversibly determined with respect to the positional signals that influenced their parents (Sternberg and Horvitz, 1986; Horvitz and Sternberg, 1991; Herman and Hedgecock, 1990; Hill and Sternberg, 1992; Greenwald et al., 1983).

The heterochronic gene pathway controls the time of the VPC divisions by regulating the timing of their G_1/S transition (Euling and Ambros, 1996). In loss-of-function *lin-14* or *lin-28* mutants, VPCs divide precociously, in the L2 stage, resulting in early but otherwise essentially normal patterns of vulval cell division (Ambros and Horvitz, 1984; Euling and Ambros, 1996). Heterochronic mutations do not significantly affect the spatial patterning of vulval fates, but alter the temporal expression of those fates. Thus, it appears that the heterochronic gene pathway acts independently of the spatial patterning signals to control when VPCs are competent to select a fate, divide and produce specialized vulval cells (Euling and Ambros, 1996).

The fact that mutations in heterochronic genes cause precocious vulval cell division allowed us to examine the behavior

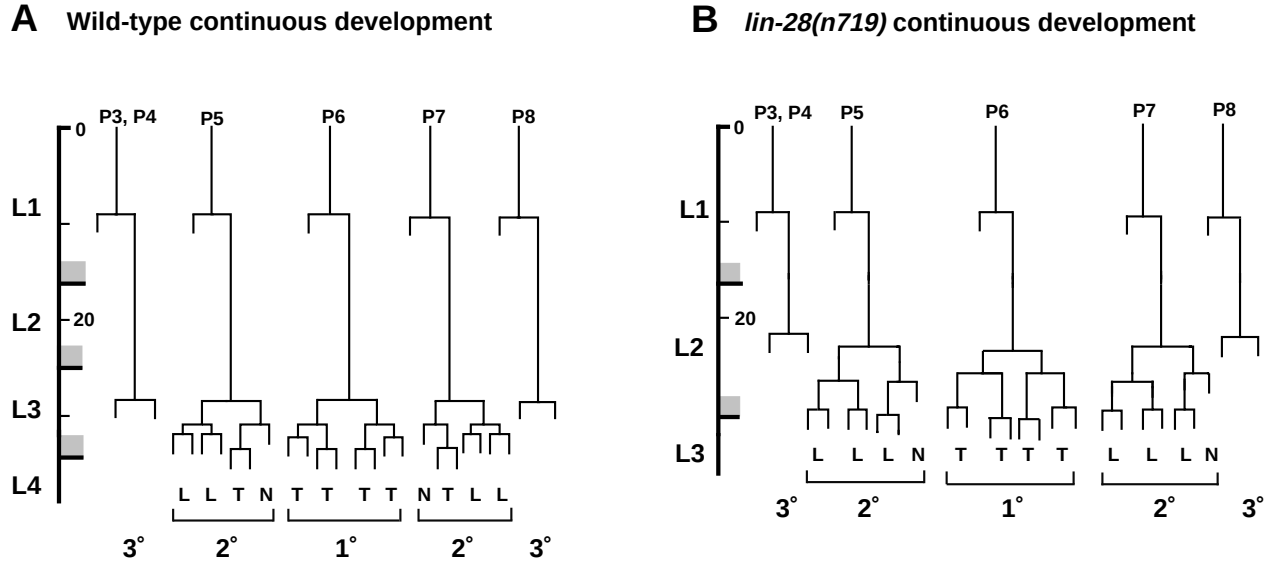

Fig. 1. Ventral hypodermal cell lineages during continuous development. Cell lineages were observed using Nomarski optics at 20°C. Shaded boxes represent time in lethargus, the end of which is defined as the time when pharyngeal pumping resumed. The time scale is hours at 20°C, beginning at hatching. Brackets indicate cells that adopted vulval fates. (No cell divisions are shown for the anterior daughters of the P cells, which are neuroblasts). 1°, 2° and 3° vulval fates are characterized by the pattern, number, orientation of cell divisions and morphogenetic behavior of the progeny cells (Sulston and White, 1980; Sternberg and Horvitz, 1986). L, longitudinal division plane; T, transverse division plane; N, no division (Sternberg and Horvitz, 1986). In the wild type, T and N cells participate in vulval morphogenesis whereas the L cells adhere to the ventral cuticle. (A) Wild-type P3-P8 cell lineages during continuous development (from Sulston and Horvitz, 1977). (B) P3-P8 cell lineages of a continuously developing *lin-28(n719)* mutant animal (Euling and Ambros, 1996). The rate of development of *lin-28(n719)* animals is somewhat slower than in wild type. Polarity reversals of P5.p or P7.p cell lineages frequently occur in *lin-28(lf)* animals: Among *lin-28(n719)* animals analyzed by cell lineage analysis (n=15) or by examining vulval anatomy (n=21), 19/36 exhibited a polarity reversal of P7.p, 2/36 exhibited a polarity reversal of P5.p, and 4/36 exhibited incomplete induction of P7.p (our results and W. Katz, personal communication). None of the VPCs in these animals exhibited greater than three rounds of cell division. In 10 *lin-28(n719)* animals at the final molt, 62/70 daughters of L divisions appeared to adhere normally to the ventral cuticle, and all products of P3.p, P4.p, and P8.p appeared to join the syncytium in these *lin-28(n719)* animals, as in the wild type.

of otherwise determined VPC progeny cells in a novel temporal context, the dauer larva and post-dauer developmental pathway. The dauer larva is an alternative, developmentally arrested third larval stage formed under poor growth conditions (Golden and Riddle, 1984). Since wild-type dauer larvae arrest development at the end of the L2, all of their VPCs are undivided. However, in *lin-28* mutants, precocious vulval development is underway precisely when dauer larva developmental arrest occurs and, therefore, the mutant dauer larvae contain partially developed vulvae. The presence of VPC progeny cells in the *lin-28* dauer larvae offered the opportunity to explore the effects of temporary developmental arrest on the process of vulval cell fate determination.

The effects of developmental arrest and post-dauer development on the fates of precociously formed vulval cells is of interest for two principal reasons: First, a post-dauer reprogramming of vulval cells would suggest a reversibility of steps in cell fate commitment in response to the intercellular vulval patterning signals. In this paper, we demonstrate that when VPC daughter and granddaughter cells develop through the dauer pathway, they revert to a state of tripotency and signal-sensitivity indistinguishable from that of normal VPCs. Second, development through the dauer larva stage corrects the temporal mis-specification of lateral hypodermal cells in heterochronic mutants (Liu and Ambros, 1991). A similar reprogramming of vulval (ventral hypodermal) cell fates would suggest that there is a temporal reprogramming activity for the entire hypodermis of dauer larvae, and perhaps also for other cell lineages. Our results suggest that (1) the regulatory changes that distinguish multipotent VPCs from their daughters and granddaughters are reversible by dauer larva developmental arrest and that (2) a regulatory mechanism associated with the dauer larva sets vulval cells to the proper temporal state for post-dauer development.

MATERIALS AND METHODS

Nematode culture

C. elegans strains were grown and maintained as described by Brenner (1974) and Wood (1988). All experiments were performed at 20°C unless otherwise noted.

C. elegans strains

The wild-type strain used was *C. elegans* var. Bristol strain N2. Mutant alleles are as described (Brenner, 1974; Wood, 1988; Ambros and Horvitz, 1984; Ambros and Horvitz, 1987) unless otherwise noted. Strains used are: MT1035 *lin-12(n137sd n460ts)*, MT1397 *lin-14(n179ts)*, MT2015 *lin-28(n947)*, MT3232 *lin-10(n1390)* (Kim and Horvitz, 1990), MT3639 *unc-13(e1091am) lin-11(n566)*, MT5788 *nIs2 (lin-11::lac-Z)*, MT5875 *lin-28(n947)*; *nIs2 (lin-11::lacZ)*, VT297 *lin-28(n719)*, VT592 *lin-10(n1390) lin-28(n719)*, VT757 *lin-28(n719); lin-12(n137sd n460ts)*.

Dauer larva isolation

Dauer larva formation was induced as described (Golden and Riddle,

1984), and dauer larvae were selected by detergent treatment (Golden and Riddle, 1984) and/or morphological criteria (Singh and Sulston, 1978). Dauer pheromone was prepared as described (Golden and Riddle, 1984) with modifications from C. Bargmann (personal communication) and H. Tissenbaum (personal communication).

Cell lineage analysis

Vulval cell lineages were followed using Nomarski optics as described (Sulston and Horvitz, 1977). Cell lineage nomenclature is as described (Sulston and Horvitz, 1977; Sternberg and Horvitz, 1986). Pn.px denotes a daughter of a Pn.p cell, where 'x' refers to either the posterior or anterior daughter of P3.p-P8.p; similarly, Pn.pxx and Pn.pxxx are granddaughter and great-granddaughters, respectively, of P3.p-P8.p (Fig. 2). Lineal designations (e.g., Pn.px) do not necessarily imply other aspects of cell identity, such as cell type or state of determination or differentiation. For technical reasons, cell lineages were not followed directly as animals entered the dauer larva stage, so the pre-dauer vulval cell lineage history was inferred by anatomical analysis. Individual dauer larvae were observed using Nomarski optics. The likely cell lineage history of each vulval cell nucleus was determined from its size and position relative to the gonad, other ventral hypodermal nuclei and ventral nerve cord nuclei. Undivided VPCs were recognized by their relatively large and well-separated nuclei. Cells related by division of a common ancestor were identified by the relatively small size and more closely grouped placement of their nuclei. One or more precocious VPC divisions were observed to have occurred prior to dauer larva arrest in approximately 45% (n=96) of *lin-28(lf)* dauer larvae. Occasionally, the lineage history of some cells was ambiguous, particularly when a group of three similarly sized nuclei were judged to be descendants of one VPC, but their precise lineage could not be deduced.

Temperature-shift experiments

lin-28(n719); lin-12(n137sd n460ts) hermaphrodites were grown at 20°C, and eggs were collected, placed at 15°C or 25°C until the L1 molt or until a defined time thereafter, picked individually and examined by Nomarski optics at 20°C to confirm the animal's developmental stage and to determine if VPC cells had divided. Each animal was then immediately placed on culture plates at the alternative temperature. Developmental stage was determined by examining animals for molting behavior and the extent of gonad development. These manipulations at 20°C took less than 5 minutes. Each temperature-shifted animal (and control animals maintained on the original stock plates) were examined at the L3 and/or L4 stages using Nomarski optics; the multivulva (muv) phenotype was scored based on the number of VPCs whose progeny exhibited vulval morphogenesis (see legend to Table 2).

Laser microsurgery

Laser microsurgery was performed as described (Sulston and White, 1980; Avery and Horvitz, 1987), and the operated and mock-operated animals were transferred to food to allow further development. Since it was difficult to identify the anchor cell in dauer larvae, approximately four cells in the mid-region of the somatic gonad were killed and successful destruction of the anchor cell was confirmed later using Nomarski optics. In *lin-28(n719)* hatchlings, the entire 4-cell gonadal primordium was ablated. The operated and mock-operated hatchlings were grown in microtiter wells with dauer pheromone and an excess of unoperated, phenotypically distinguishable, *unc-13 lin-11* animals at 25°C in order to promote efficient dauer larvae formation.

lin-11::lacZ expression

Dauer larvae were selected as described above, placed in a drop of M9 on a microscope slide, covered with a coverslip and frozen on dry ice for 10 minutes. The coverslip was then removed and the animals were fixed in acetone and incubated overnight with 0.1% Xgal (Fire et al., 1990), and 1 μg/ml DAPI (Wood, 1988). Animals were observed using Nomarski optics with white light to detect *lacZ* expression and by epifluorescence to observe DAPI nuclear staining. Pharyngeal expression of *lin-11::lacZ* provided a positive control for fixation and Xgal staining (Freyd, 1991).

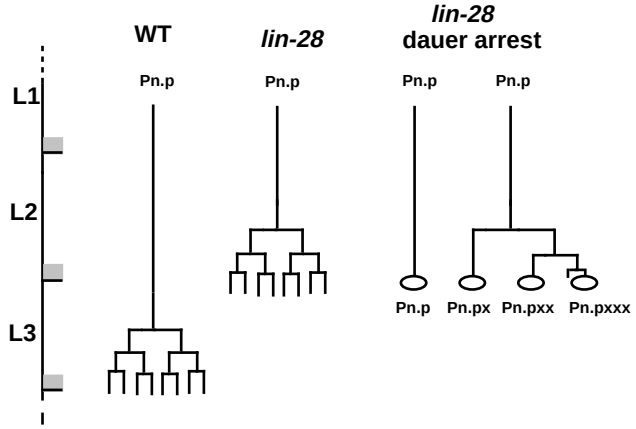

Fig. 2. Developmental arrest of precocious vulval cell lineages. An example of the cell division pattern of a P6.p cell in a wild-type and a *lin-28(lf)* hermaphrodite developing continuously are shown (with the time scale normalized to the wild type) to illustrate the precocious development of the vulval lineages in the mutant. Dauer larva arrest interrupts the precocious vulval lineages at any of the three rounds of cell division. Consequently, *lin-28(lf)* dauer larvae can contain various vulval cells (ovals), including Pn.p, Pn.px, Pn.pxx and Pn.pxxx cells.

RESULTS

Post-dauer suppression of vulval defects in *lin-28* hermaphrodites

Cell lineage analysis showed that the L2-specific events of the lateral and ventral hypodermal cell lineages are deleted in *lin-28(lf)* animals, and the animals express all subsequent hypodermal developmental events, including vulval development, one stage earlier than normal (Ambros and Horvitz, 1984; Euling and Ambros, 1996; Fig. 1B). Although vulval development is precocious in *lin-28* mutant animals by approximately one full larval stage, it is otherwise essentially normal with respect to the number of rounds of cell divisions and spatial patterning and execution of the three vulval cell fates (Fig. 1B; Euling and Ambros, 1996). In continuously developing *lin-28* mutants, vulva morphogenesis begins normally, and then appears to fail in the final phases, resulting in a nonfunctional protruding pseudovulva.

When *C. elegans* larvae encounter unfavorable growth conditions, they can arrest development at the end of the L2 as dauer larvae (Riddle, 1988). When dauer larvae are placed in conditions favorable for growth, they resume development and execute L3 and L4 developmental events. The two wild-type post-dauer larval stages, PDL3 and PDL4, consist of the same developmental events as the L3 and L4 stages of continuous development (Riddle, 1988; Liu and Ambros, 1991). Dauer larva developmental arrest, followed by development through the post-dauer larval stages, has a dramatic effect on the vulval phenotype of *lin-28* hermaphrodites. Whereas *lin-28(lf)* adult hermaphrodites that develop continuously never lay eggs

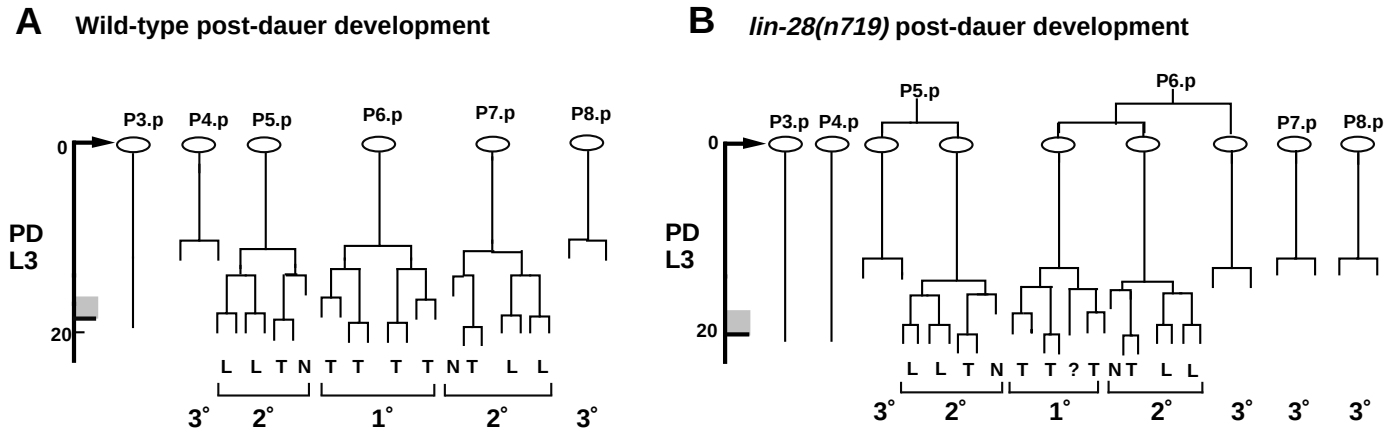

Fig. 3. Post-dauer vulval cell lineages. Cell lineages were followed as described in Materials and Methods, and diagrammed as in Fig. 1, except that the time scale is in hours at 20°C after feeding. Ovals represent vulval cells in dauer larvae at the time of feeding. (A) Post-dauer vulval cell lineages of one wild-type animal representative of the 11 wild-type animals followed. (B) Post-dauer vulval cell lineages of one *lin-28(n719)* animal representative of the 26 *lin-28(n719)* animals followed. P6.p cell division products were of similar size and spacing in the *lin-28(n719)* dauer larva shown and, thus, the lineage history may be P6.pa, P6.ppa, and P6.ppp instead of as shown (P6.paa, P6.pap, and P6.pp). '?' indicates a cell that had not divided by the start of the PDL3 lethargus and was not observed further. Adherence to the ventral cuticle appeared to be normal based on the criterion of a vulval morphogenesis similar to the wild type, although this behavior was not explicitly noted for individual nuclei. The rate of development of this particular animal was slightly slower than the wild type.

(*n*=118 for *n179*; *n*=84 for *n947*), 71% (*n*=816) of *lin-28(n719)* adults, and 69% (*n*=881) of *lin-28(n947)* adults that develop through the dauer larva stage exhibit normal vulva morphogenesis and can lay eggs. This dramatically improved vulval morphology and egg-laying ability of post-dauer *lin-28* hermaphrodites suggests that the process of post-dauer development suppresses the effects of precocious vulval development.

Cells of partially developed vulvae behave like vulval precursor cells (VPCs) after dauer larva developmental arrest

To determine how development through the dauer larva stage corrects the egg-laying defect of *lin-28* animals, we examined the anatomy of *lin-28(lf)* dauer larvae to identify the lineal origin of their vulval cells (see Materials and Methods; Figs 2, 3B), and then followed their post-dauer vulva cell lineages. In *lin-28(n719)* dauer larvae, precocious vulval development was variably arrested at any of the three vulval cell division cycles (Fig. 2). In the case of VPCs that had not divided prior to dauer larva arrest, the timing of their post-dauer vulval cell divisions was normal and they expressed one of the three usual vulval fates, depending on their position (for example, P7.p and P8.p in Fig. 3B). Thus, in *lin-28* animals, VPCs that did not divide prior to the onset of post-dauer development retained their VPC identity throughout dauer larva developmental arrest and post-dauer development.

Remarkably, Pn.px and Pn.pxx cells that had been generated by division of VPCs prior to dauer larva arrest also behaved like tripotent vulval precursor cells during post-dauer development. In fact, Pn.p, Pn.px, and/or Pn.pxx cells in *lin-28* dauer larvae all subsequently behaved equivalently, like tripotent VPCs (Fig. 3B). Post-dauer Pn.p, Pn.px and Pn.pxx cells always expressed cell lineage patterns characteristic of the 1°, 2°, or 3° cell fates expressed by normal P3.p-P8.p cells (VPCs). In 26 *lin-28(n719)* animals in which post-dauer cell lineages were followed, 28/28 Pn.px cells and 3/3 Pn.pxx cells (all of which had been formed prior to dauer larva arrest) expressed post-dauer cell lineage patterns like those normally generated by VPCs. These post-dauer vulval cell lineage patterns closely resembled the usual patterns generated by VPCs by all discernible criteria, including the number and orientation of cell divisions, and the nuclear morphology and morphogenetic behavior of their progeny. Further, a *lin-11::lacZ* reporter gene that is specific for certain cells of 2° lineages (Freyd, 1991; G. Acton and H. R. Horvitz, personal communication) was expressed during post-dauer development of *lin-28; lin-11::lacZ* animals in a pattern consistent with the generation of normal 2° cell fates (data not shown).

We interpret this behavior of precocious Pn.px and Pn.pxx cells during post-dauer development to reflect a dauer larva-related process that reprograms the developmental state of these cells to that of the tripotent VPCs. It is noteworthy that the timing of post-dauer vulval development in *lin-28* animals appears to be normal (Fig. 3), indicating that these reprogrammed vulval cells obey temporal signals during post-dauer development that are independent of *lin-28*, which controls the timing of VPC division during continuous development (Euling and Ambros, 1996).

Reprogrammed vulval cells acquire sensitivity to the normal vulval patterning signals during post-dauer development

Significantly, the specific fate expressed by a Pn.p**,** Pn.px or Pn.pxx cell during *lin-28* post-dauer development appears to depend on its position relative to the gonadal anchor cell and not on its pre-dauer lineage history. In each post-dauer *lin-28* animal observed, exactly three vulval cells generated 1° or 2° vulval lineages, and the 1° and 2° lineages were always centered under the anchor cell, as in wild-type vulval development. For example, in the *lin-28(n719)* dauer larva shown in Fig. 3B, a Pn.pxx cell (P6.paa) that was positioned closest to the gonadal anchor cell expressed a 1° cell lineage pattern during post-dauer development. The cells flanking P6.paa in that animal, a Pn.px cell (P5.pp) and a Pn.pxx cell (P6.pap),

Table 1. Gonad-dependence of vulval induction in *lin-28* and the wild type

Genotype	Stage	Operation*	Animals	Vulval induction† post-dauer			
				–	+	++	+++
N2	dauer	AC+	14	0	0	1‡	13
N2	dauer	AC–	10	10	0	0	0
lin-28(n719)§	dauer	AC+	2	0	0	0	2
lin-28(n719)	dauer	AC–	7	5	2¶	0	0

*AC– , anchor cell ablated with a laser microbeam (see Materials and Methods). Mock-ablated animals (AC+) were anesthetized without ablation, or anesthetized and subjected to ablation of gonadal cells other than the anchor cell. (Additional AC+ *lin-28(n719)* dauer larvae were observed during post-dauer development and found to exhibit vulval induction, but are not included here because they were not anesthetized).

†The extent of vulval induction is indicated using a notation modified from Kimble, 1981. –, no vulval induction (only 3° fates occur); +, partial vulval induction (mostly 3° fates expressed, but occasionally second round cell divisions occur); ++, incomplete vulval induction (second and third rounds of cell division frequently occur, but no morphogenesis occurs); +++ , complete vulval induction (the normal pattern and number of 1°, 2° and 3° fates occur, with normal vulva morphogenesis).

‡An egg-laying defective animal.

§In continuously developing *lin-28* animals in which the gonad had been ablated, VPCs divided only once, indicating the absence of vulval induction. This single round of division occurred precociously, in the mid-L2 stage (Euling and Ambros, 1996).

¶The few VPC divisions in these animals may result from incomplete destruction of the anchor cell.

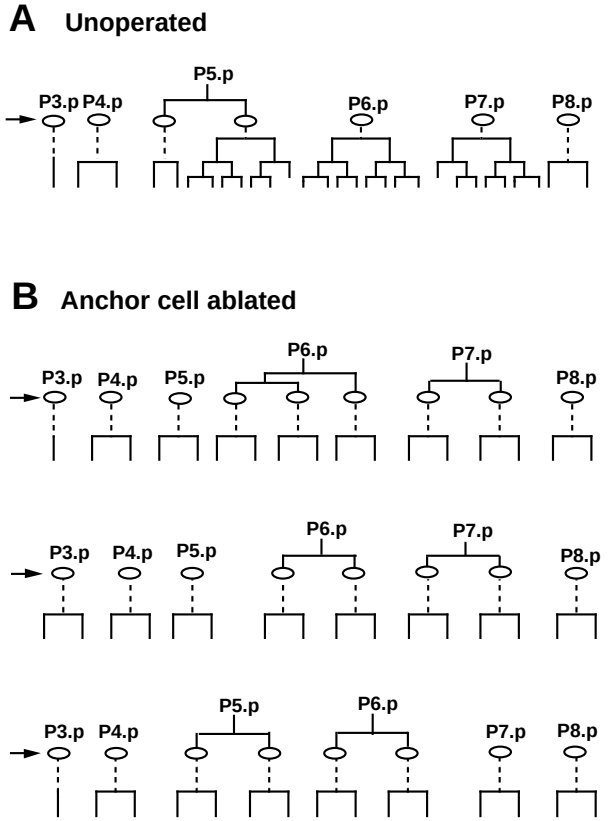

Fig. 4. Gonad signal-dependence of reprogrammed vulval fates in *lin-28* post-dauer development. Anchor cells of dauer larvae were ablated with a laser microbeam, and cell lineages were followed as described in Materials and Methods. The lineages shown are from animals listed in Table 1. Arrows indicate cells (represented by ovals) that were present in arrested dauer larvae. Pre-dauer cell divisions are indicated above the arrow.

generated cell division patterns characteristic of the 2° fate. Vulval cells more distant from the anchor cell, P5.pa, P6.pp, P7.p and P8.p, expressed the 3° lineage pattern, which is the uninduced fate typical of a VPC located further from the anchor cell. Thus, these reprogrammed vulval cells appear to acquire the potential to express any of the three vulval fates during post-dauer development and they display the normal sensitivity to spatial cues in their cell fate specification.

During continuous development, Pn.px and Pn.pxx cells seem to be restricted to specific programs of vulval cell division and differentiation since they do not alter their fates when intercellular signals are experimentally manipulated (Sternberg and Horvitz, 1986). This determined behavior of Pn.px and Pn.pxx cells contrasts with the state of VPCs, which are tripotent cells whose fates are signal-sensitive. To further test whether the post-dauer-reprogrammed Pn.px and Pn.pxx cells are equivalent to normal VPCs, we examined whether they required an inductive signal from the gonadal anchor cell for the expression of 1° and 2° fates. During wild-type post-dauer development, all VPCs expressed 3° fates in the absence of an anchor cell (Table 1), (as is the case during continuous development in the wild type (Kimble, 1981) or *lin-28* animals (Euling and Ambros, 1996)). To test whether post-dauer reprogrammed vulva cells in *lin-28(n719)* animals exhibit a similar anchor cell dependence, we ablated the anchor cell in *lin-28(n719)* dauer larvae and followed their post-dauer vulval cell lineages. As expected for VPCs, Pn.px and Pn.pxx cells in anchor cell ablated *lin-28(n719)* dauer larvae expressed 3° fates during post-dauer development (Table 1; Fig. 4). In contrast, complete induction of 1° and 2° fates during post-dauer development was observed in all *lin-28(n719)* mock-operated dauer larvae. Thus, Pn.px and Pn.pxx cells that were generated prior to dauer larva arrest behaved like VPCs during post-dauer development by the criterion of anchor cell dependence of their 1° and 2° fates.

The same spatial signaling systems that govern vulval patterning during continuous development also appear to act during post-dauer development. A *lin-3::lacZ* transgene is expressed in the gonad of wild-type dauer larvae and post-dauer animals (data not shown), indicating that the gonadal signal affecting post-dauer vulval cell lineages is likely the *lin-3* gene product, as in continuous development. *lin-15*, *lin-3*, *lin-10* and *lin-12* mutations all affect the patterning of wild-type post-dauer vulval fates, although the penetrance of the *lin-3* and *lin-10* defects are reduced compared with continuous development (Ferguson and Horvitz, 1985; data not shown). Furthermore, *lin-28* mutations do not prevent the expression of *lin-3*, *lin-15*, *lin-10* and *lin-12* vulval phenotypes during continuous development (Euling and Ambros, 1996), or during post-dauer development (data not shown). Thus, it is likely that the pattern of fates expressed by reprogrammed vulval cells of *lin-28* post-dauer animals is governed by the same intercellular signals as in the wild type.

Terminal (Pn.pxxx) cells of the vulval lineage are not reprogrammed during post-dauer development

In contrast to the Pn.px and Pn.pxx cells, Pn.pxxx cells

generated prior to dauer larva arrest failed to divide during post-dauer development. In 26 *lin-28(n719)* dauer larvae, four Pn.pxxx cells were observed to have been formed prior to dauer larva arrest. None of these four Pn.pxxx cells divided during post-dauer development. In one other *lin-28(n719)* dauer larva, Pn.pxxx cells were evident that had begun to undergo vulval morphogenesis. During post-dauer development these cells continued vulval morphogenesis in the PDL3 and no further cell divisions were observed (data not shown). (This animal was egg-laying defective, suggesting that the pre-dauer occurrence of differentiated Pn.pxxx cells may account for some of the egg-laying defective *lin-28* post-dauer animals). Thus, unlike Pn.px and Pn.pxx cells, Pn.pxxx cells in *lin-28* animals appear to be irreversibly determined under the conditions of post-dauer development.

Reprogramming of vulval cells occurs after developmental arrest

To test for whether the reprogramming of precocious Pn.px cells in *lin-28* animals reflects the reversal of their normal state of commitment, and whether reprogramming occurs before or after dauer larva developmental arrest, we performed two experiments: First, we confirmed that Pn.px cells in *lin-28* hermaphrodites are committed with respect to the lateral signal controlled by *lin-12*, as in the wild type. Second, we tested whether precocious Pn.px cells formed prior to dauer larvae arrest in *lin-28* animals exhibit a normal response to the presence or absence of the gonadal inductive signal.

To determine whether precocious Pn.px cells of *lin-28* animals are committed with respect to *lin-12* activity, we performed temperature-shift experiments with *lin-28(n719); lin-12(n137sd n460ts)* animals and scored their multivulval (muv) phenotype. *n460ts* is a temperature-dependent suppressor of the *lin-12(n137sd)* muv phenotype (Greenwald et al., 1983; Table 2). Previous temperature-shift experiments with *lin-12(n137sd n460ts)* animals showed that vulval fates are affected by *lin-12* activity during the early L3, only prior to VPC cell division, and that VPC progeny (Pn.px) cells appear to be irreversibly committed with respect to *lin-12* activity (Greenwald et al, 1983). Similarly, we found that temperature shifts with *lin-28(n719); lin-12(n137sd n460ts)* animals indicated that vulval cell fates were altered by temperature shifts performed before the time of VPC cell division but were unaffected by temperature shifts performed after VPC cell division (Table 2). These results indicate that in precocious vulva development, as in normally timed vulval development, VPC progeny are committed such that they are not sensitive to *lin-12* activity. Therefore, the post-dauer reprogramming of Pn.px cells in *lin-28* animals likely reflects a reversal of their normal state of determination.

To determine when, with respect to dauer larva developmental arrest, vulval cells become reprogrammed, we used laser microsurgery of the gonad to assess the developmental state of precociously formed Pn.px cells in *lin-28(n719)* dauer larvae. VPC cell division is gonad-independent and Pn.px cell division is gonad-dependent. Thus, if the precocious Pn.px cells of *lin-28* animals are reprogrammed to VPCs after dauer larva developmental arrest, and not before, then their response to the presence or absence of the gonadal inductive signal prior to dauer arrest should be like that of normal Pn.px cells. Specifically, in animals lacking a gonadal anchor cell or *lin-10* activity, all VPCs, including those that normally express 1° and 2° fates, will express the 3° fate (Kim and Horvitz, 1990), which is reflected by division of the VPC to produce two non-dividing Pn.px cells. Thus, if Pn.px cells of *lin-28* animals retain their identity until after developmental arrest, then they are expected to be undivided in dauer larvae lacking an anchor cell or *lin-10* activity. Alternatively, if Pn.px cells become reprogrammed to the VPC fate prior to dauer larva developmental arrest, then they are expected to act like multipotent VPCs, and thus could divide prior to arrest in dauer larvae lacking the gonad or *lin-10* activity.

The gonad was ablated in *lin-28* animals at hatching and the animals were allowed to form dauer larvae (Materials and Methods). Also, *lin-10 lin-28* dauer larvae were selected. Both types of dauer larvae were then examined using Nomarski optics to determine whether P5.px-P7.px cells had divided prior to dauer larva arrest (Materials and Methods). In unoperated (AC+) control *lin-28(n719)* dauer larvae, we found that approximately 25% of P5.px-P7.px cells had divided prior to dauer larva arrest (Table 3). In contrast, a statistically significant decrease in the proportion of P5.px-P7.px cell divisions was observed in *lin-10 lin-28* and anchor cell-ablated *lin-28*

Table 2. Temperature shifts of *lin-28(n719); lin-12(n137sd n460ts)* hermaphrodites

Stage at shift†	Muv*	
	Downshift	Upshift
L1 molt, Pn.p	6/6	0/4
Early L2, Pn.p	8/10**	1/6
Mid-L2, Pn.p‡	1/10**	5/7**
Pn.px§	0/10	14/14**
Pn.pxx¶	0/4	2/2

*The fraction of animals that exhibited the multivulva (muv) phenotype when scored in the L3 and L4 stages. The muv phenotype is defined as expression of at least four ectopic pseudovulvae evidenced by vulval morphogenesis. Some *lin-28(n719)* single mutant animals have two (and occasionally three) ventral protrusions (Euling and Ambros, 1996), but have not been observed to have four ventral protrusions. 27/27 *lin-28(n719); lin-12(n137sd n460ts)* animals maintained at 15°C were muv by this criterion; 0/68 animals maintained at 25°C were muv. 0/16 *lin-28(n719)* animals maintained at 15°C were muv and 0/16 maintained at 25°C were muv. These *lin-28(n719)* controls were also examined for cell divisions and vulva morphogenesis from P4.p and P8.p (P4/8.p) specifically: 0/36 and 1/32 P4/8.p cells showed extra divisions and vulva morphogenesis in *lin-28(n719)* animals maintained at 15°C and 25°C respectively.

†Animals at 15°C and 25°C were staged using Nomarski optics. The precise state of development of individual Pn.ps was noted (Pn.p, no division; Pn.px, one round of division; Pn.pxx, two rounds of division), and the animals were shifted between 15°C and 25°C as described in Materials and Methods.

‡Mid-L2 stage animals in which one or more VPC nuclei exhibited characteristics of cells late in the cell cycle: an enlarged nucleus and/or nuclear membrane breakdown.

§Late L2 animals in which four or more VPCs had divided one round and none of the VPCs had divided two rounds.

¶L2 molt animals in which three or more VPCs had divided two rounds. For downshifted animals, P5.p-P7.p had divided two rounds at the time of the shift but P3.p, P4.p, or P8.p had not, since they rarely divide in *lin-12(n137sd n460ts)* animals maintained at 25°C (see * above). For upshifted animals, at least four VPCs had divided two rounds at the time of shift.

**In each of these four sets, one animal produced 4 progeny cells from P3.p, P4.p, and/or P8.p with no associated vulval morphogenesis. These apparent intermediate fates were not counted as ectopic pseudovulvae contributing to a muv phenotype. This intermediate phenotype was observed in 1/15 *lin-12(n137sd n460ts)* single mutant animals maintained at 15°C.

Table 3. Gonad signal-dependence of pre-dauer P5.px-P7.px cell divisions

Experiment	Genotype	Gonad	Stage assayed	% P5.px-P7.px cells divided	
1	*lin-28(n719)*	+	L2 molt*	100	(*n*=18)
2	*lin-28(n719)*	+	dauer†	24.8¶	(*n*=230)
3	*lin-28(n719)*	–	dauer‡	6.3**	(*n*=16)
4	*lin-10(n1390)lin-28(n719)*	+	dauer§	4.2**	(*n*=72)
5	*lin-10(n1390)lin-28(n719)*	+	L3 molt*	0	(*n*=66)

*Grown continuously, without dauer larva formation.

†Represents a combination of 142 plate-starved and 88 pheromone-induced dauer larvae (grown in liquid), which had similar percentages of P5.px-P7.px divisions (25.4% and 22.8%, respectively).

‡Pheromone-induced dauer larvae (grown in liquid).

§Plate-starved dauer larvae.

¶Animals in which evidence of P5.px-P7.px divisions was ambiguous were discarded.

**In each of these two experiments, one apparent Pn.px division was ambiguous (see Materials and Methods), but is included to provide conservative overestimates of Pn.px division frequency relative to the control animals in experiment 2 (see ¶ above). Considering that these values are overestimates, they are not likely to be significantly different from experiment 5.

χ-square analysis (Rohlf and Sokal, 1981; Sokal and Rohlf, 1981) was used to compare the proportion of P5.px-P7.px cell divisions in *lin-28(n719)* dauer larvae with and without the vulval inductive signal. The conservative proportion of P5.px-P7.px divisions (which includes the ambiguously divided cells) that occurred in the absence of *lin-10* activity (experiment 4) is statistically different from the proportion of Pn.px divisions that occurred in the presence of *lin-10* activity (experiment 2) ($\chi^{2=}$14.6; P= 0.0002). Similarly, when the *lin-10* mutant dauer larvae in experiment 4 were combined with dauer larvae that had been laser operated to destroy the gonadal anchor cell (experiment 3) and the combined values were compared with the control animals (experiment 2), the proportion of P5.px-P7.px divisions was statistically different from the controls (χ^2=16.8; P=0.0002).

animals (Table 3). Specifically, in *lin-28(n719)* dauer larvae lacking either *lin-10* activity or a gonadal signal (combining experiments 3 and 4, Table 3), less than 4.5% of the Pn.px cells appeared to have divided prior to dauer larvae arrest. The significant decrease in Pn.px cell divisions observed upon removal of the gonadal signal or *lin-10* activity indicates that the majority, and perhaps all (see Table 3 legend), of the precociously generated pre-dauer Pn.px cells in *lin-28* dauer larvae exhibited a normal Pn.px cell identity prior to developmental arrest. This result is consistent with the conclusion that precocious Pn.px cells are determined towards their fates and that they become reprogrammed to VPCs after dauer larva arrest.

We examined *lin-11::lacZ* expression in *lin-28* dauer larvae in order to assess the developmental state of certain Pn.pxx cells in dauer larvae. In wild-type animals carrying an integrated copy of the *lin-11::lacZ* reporter gene, β-galactosidase is expressed in particular Pn.pxx cells of 2° lineages (Freyd, 1991). Of 100 *lin-28(n947); lin-11::lacZ* dauer larvae that were examined, none exhibited β-galactosidase activity in vulval cells (data not shown). Based on the frequency of P5/7.pxx cells in *lin-28* dauer larvae and the frequency of *lin-11::lacZ* expression in P5/7.pxx cells of *lin-28* animals (data not shown), approximately 10% of these 100 dauer larvae were expected to contain *lacZ*-expressing P5/7.pxx cells. This apparent repression of *lin-11::lacZ* expression in *lin-28* dauer larvae may reflect an inhibition of vulval gene expression that may contribute to the reprogramming of vulval cells.

DISCUSSION

Reprogramming of determined vulval cells to the multipotent VPC state

Previous studies of continuously developing wild-type larvae showed that VPCs are tripotent, while their Pn.px and Pn.pxx progeny are determined with respect to positional information (Sulston and White, 1980; Kimble, 1981; Greenwald et al., 1983; Sternberg and Horvitz, 1986). Two observations suggest that the precocious Pn.px and Pn.pxx cells of *lin-28* animals are also positionally determined. First, the fates expressed by precocious vulval cells in *lin-28* animals exhibit the same sensitivity to the gonadal inductive signal and the same involvement of genetically identified signalling molecules as does wild-type vulval development (Euling and Ambros, 1996). Second, here we show that the time of action of a temperature-sensitive *lin-12(sd)* mutation is prior to VPC cell division in *lin-28* precocious animals. This indicates that, with respect to the lateral signal controlled by *lin-12*, the fates of precocious Pn.px and Pn.pxx cells are established prior to VPC cell division, as in the wild type.

We found that, if Pn.px and Pn.pxx cells are placed in the novel temporal context of the dauer larva and post-dauer development using a *lin-28* mutation, they become reprogrammed to the tripotent, signal-dependent VPC state. This conclusion is based on three observations of the behavior of precociously formed vulval cells during post-dauer development of *lin-28* mutants: (1) they divide during the first post-dauer stage (PDL3) at the same time as do wild-type VPCs; (2) they each express one of the three VPC-characteristic (1°, 2° or 3°) cell lineage fates and (3) they express those fates in response to intercellular signals in a manner indistinguishable from normal VPCs.

The observation that, although Pn.px and Pn.pxx cells are positionally determined during continuous development, they nevertheless become reprogrammed to VPCs after dauer larva arrest suggests that the steps in cell fate restriction of Pn.px and Pn.pxx cells are reversible in the wild type. By contrast, Pn.pxxx cells were not reprogrammed upon post-dauer development. These findings suggest that Pn.px and Pn.pxx cell fate determination involves steps in vulval cell fate restriction intermediate between the multipotency of VPCs and the terminal differentiation characteristic of Pn.pxxx cells. It is striking that vulval cells (specifically Pn.px and Pn.pxx cells) that are never found in wild-type dauer larvae are always reprogrammed to VPCs if they are ‘temporally transplanted’ to dauer larvae of precocious mutants. This suggests that Pn.px and Pn.pxx cells may normally possess cryptic VPC character that is unmasked when the vulval developmental program is interrupted in dauer larvae.

Reversal of cell determination has been observed in other systems. Myogenic differentiation appears to be reversible during vertebrate limb regeneration (Lo et al., 1993). Similarly, yeast cells can switch from the meiotic program back to the less differentiated state of mitotic growth in response to temporary cell cycle arrest (Honigberg and Esposito, 1994). While it is unclear what these other situations may have in common with the vulval cell reprogramming, perhaps in general the interruption of developmental and cell division programs, combined with specific novel developmental signals, can lead to the reversal of cell fate restriction. The post-dauer reprogramming

of precocious vulval cells reported here, together with the post-dauer reprogramming previously observed for lateral hypodermal cells of *C. elegans* heterochronic mutants (Liu and Ambros, 1991), suggest that a global activity sets cells of the worm to the proper L3-equivalent temporal identity during the PDL3.

Reprogramming is specific to dauer larva development

The reprogramming exhibited by precocious vulval cells was observed only during post-dauer development of *lin-28* animals, not during continuous development, or under conditions of starvation without dauer larva differentiation (data not shown). The reprogramming is not simply a result of the absence of *lin-28* activity, since vulval cells of *lin-14* mutants exhibit a similar post-dauer reprogramming (data not shown). However, because we observed vulval cell reprogramming only in dauer larvae of heterochronic mutants, we cannot rule out the possibility that the phenomenon reflects a role for the heterochronic gene pathway in maintenance of vulval cell developmental identity specifically in dauer larvae. We do not favor this latter interpretation because it requires that one assume that *lin-28* and *lin-14* activities are required to maintain a Pn.px or Pn.pxx identity exclusively during the dauer larva stage, and not during continuous development or during the execution of post-dauer development. We favor the simpler interpretation that reprogramming is unrelated to *lin-28* or *lin-14* per se, and instead reflects an activity present in wild-type animals that is revealed by the post-dauer behavior of precocious vulval cells in these mutants.

Reprogramming occurs after developmental arrest

Three observations indicate that reprogramming to the multipotent VPC occurs after dauer larva developmental arrest. First, the patterns of pre-dauer cell divisions were inconsistent with reprogramming prior to dauer larva arrest; we never observed greater than three rounds of vulval cell divisions before dauer larva arrest in *lin-28* animals. Second, analysis of *lin-28* dauer larvae that lacked an anchor cell signal or *lin-10* activity suggests that pre-dauer Pn.px cell division is gonad-dependent, as is the case for normal Pn.px cells, but unlike VPCs. These results indicate that Pn.px cells become reprogrammed to the VPC state only after dauer larva arrest – perhaps in the arrested dauer larvae itself, or during early post-dauer development. Third, we observed that all Pn.pxxx cells generated prior to dauer larva arrest exhibited the morphology and non-dividing behavior characteristic of terminally differentiated vulval cells. The observation that the Pn.pxxx cell identity can be established in *lin-28* dauer larvae suggests that pre-dauer vulval lineages in these mutants proceed normally up to the point of developmental arrest and supports the view that reprogramming of Pn.px and Pn.pxx cells to VPC cells occurs after arrest.

Our finding that *lin-11::lacZ* expression was not detected in *lin-28(n947); lin-11::lacZ* dauer larvae is consistent with the notion that reprogramming of vulval cells, which would be expected to result in repression of *lin-11* expression, occurs in the arrested dauer larva. However, since the dauer larva is characterized by a global decrease in transcription (Dalley and Golomb, 1992), the absence of *lin-11::lacZ* expression could reflect a general suppression of gene activity in dauer larvae that may or may not be related directly to the reprogramming of vulval cells in particular.

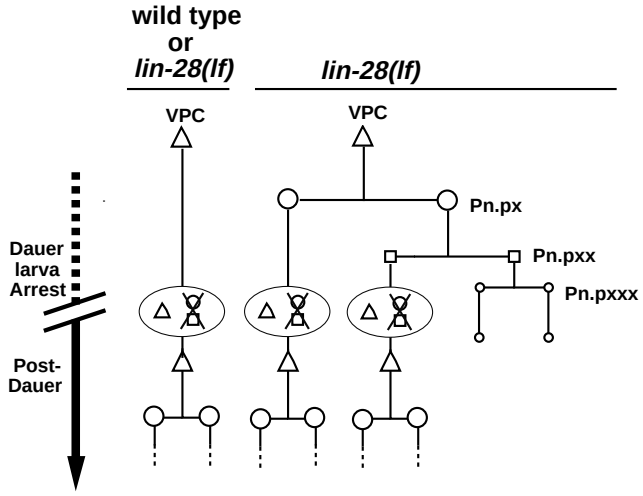

Fig. 5. A model for the reprogramming of determined vulval cells to the multipotent VPC state in *lin-28* dauer larvae. According to this model, after dauer larva developmental arrest, vulval cells that are not terminally differentiated, (i.e., Pn.p, Pn.px, and Pn.pxx cells but not Pn.pxxx cells), enter the resting stage of the cell cycle and engage a regulatory mechanism that represses the activity of vulva-specific genes. Consequently, those cells acquire and/or maintain a VPC-equivalent state, and express one of the three VPC potentials during post-dauer development. The same mechanism is proposed to prevent premature expression of differentiated vulval fates by VPCs in wild-type dauer larvae.

Developmental arrest and reversal of vulval cell determination

There are numerous models for the kinds of regulatory changes that might underlie the observed post-dauer reprogramming of vulval cells. In general, it seems that a reversal of vulval cell determination would require a despecification of vulval cells and a reactivation of the VPC tripotent state (Fig. 5). This process could occur in two steps. First, all vulval cells that have not become terminally differentiated (Pn.p, Pn.px and Pn.pxx cells) lose their cell fate specification upon dauer larva arrest. Second, for example at the onset of post-dauer development, these despecified cells are susceptible to a post-dauer 'L3-specification' activity such that they acquire the tripotency and intercellular signal-dependence typical of L3-stage VPCs. In contrast, reprogramming could occur by a one-step process, where the despecification of a determined fate in the dauer larva results directly in the unmasking of the tripotent VPC state. Perhaps the tripotent VPC identity is a ground state for the vulval cell lineage that is expressed by Pn.p cells during continuous development when the *lin-14* pathway is down-regulated (Euling and Ambros, 1996) and can be re-expressed by Pn.p progeny if the vulval differentiation program is repressed in dauer larvae.

It is likely that reprogramming would involve changes in vulval-specific gene expression. For example, in the wild type, *lin-12::lacZ* expression is relatively high in Pn.pxx cells of 2° lineages and low in P6.pxx cells (Wilkinson and Greenwald, 1995). This means that, if a precocious P6.pxx cell of a *lin-28* dauer larva becomes reprogrammed to a VPC fated to express the 2° fate (for one such observed case, see Fig. 3B), *lin-12* expression would need to become reactivated in that cell during post-dauer development. Similarly, if *lin-11* is expressed in precocious 2° cell lineages prior to dauer larva arrest, it would

likely become inactivated in those cells if they subsequently become reprogrammed to VPCs that express a non-2° cell fate.

The mechanism by which vulval cells are reprogrammed to VPCs may be related to the cell cycle arrest and/or suspended development of dauer larvae. It is likely that cells of the developing larva enter the resting phase (G_0) of the cell cycle upon dauer larva arrest, since no cell divisions occur in dauer larvae and they are metabolically depressed (reviewed in Riddle, 1988; Wadsworth and Riddle, 1988). Physiological change(s) related to G_0 cell cycle arrest may contribute to the reprogramming of Pn.px and Pn.pxx cells, perhaps by repressing steps in vulval differentiation. A detailed understanding of the reprogramming mechanism requires a genetic and molecular analysis of the reprogramming process and a precise characterization of the cell cycle state of vulval cells in dauer larvae.

Maintenance of multipotency

We propose that the reprogramming mechanism acting on precocious vulval cells reflects a process that affects the developmental state of many or all cell types during dauer larva arrest and post-dauer development (Liu and Ambros, 1991). A reprogramming mechanism may serve to coordinate the temporal patterns of development in the animal after an indefinite period of suspended development as a dauer larva. According to this view, the vulval cell reprogramming that we describe here for precocious vulval cells would reflect a normal process acting in the vulval lineage of wild-type dauer larvae. Specifically, in wild-type dauer larvae, the reprogramming activity may prevent VPCs from executing prematurely steps in vulval differentiation. Perhaps developmental arrest would otherwise predispose VPCs in wild-type dauer larvae to execute prematurely, in the absence of cell division, one or more steps toward vulval cell differentiation. Without a mechanism for reversing the state of such aberrantly differentiated cells to the proper VPC state, post-dauer vulval development would be abnormal. Perhaps precursor cells in other systems, such as other organ primordia, employ analogous regulatory mechanisms for actively reinforcing the proper developmental state during periods of developmental quiescence.

We thank Jim Dykes for advice with statistical analysis, Beth Sawin and Bob Horvitz for the use of a laser microbeam and microscope, Gwen Acton and Bob Horvitz for providing a *lin-11::lacZ* strain, Paul Sternberg for providing *lin-3::lacZ* strains, and Ann Rougvie, Min Ku and members of our laboratory for helpful discussions. This work was supported by an NIH predoctoral fellowship and Paul Mazur Fellowship (through Harvard to S. E.) and a US Public Health Service research grant GM34028 (V. A). Some nematode strains used in this work were provided by the Caenorhabditis Genetics Center, which is funded by the NIH National Center for Research Resources (NCRR).

REFERENCES

Ambros, V. R. and Horvitz, H. R. (1984). Heterochronic mutants of the nematode *Caenorhabditis elegans*. *Science* **226**, 409-416.

Ambros, V. R. and Horvitz, H. R. (1987). The *lin-14* locus of *Caenorhabditis elegans* controls the time of expression of specific postembryonic developmental events. *Genes Dev*. **1**, 398-414.

Avery, L. and Horvitz, H. R. (1987). A cell that dies during wild-type *C. elegans* development can function as a neuron in a *ced-3* mutant. *Cell* **51**, 1071-1078.

Brenner, S. (1974). The genetics of *Caenorhabditis elegans*. *Genetics* **77**, 71-94.

Dalley, B. K. and Golomb, M. (1992). Gene expression in the *Caenorhabditis elegans* dauer larva: developmental regulation of Hsp90 and other genes. *Dev. Biol.* **151**, 80-90.

Euling, S. and Ambros, V. (1996). Heterochronic genes control cell cycle progress and developmental competence of *Caenorhabditis elegans* vulva precursor cells. *Cell* **84**, 667-676.

Ferguson, E. L. and Horvitz, H. R. (1985). Identification and characterization of 22 genes that affect the vulval cell lineages of *Caenorhabditis elegans*. *Genetics* **110**, 17-72.

Ferguson, E. L., Sternberg, P.W. and Horvitz, H. R. (1987). A genetic pathway for the specification of the vulval cell lineages of *Caenorhabditis elegans*. *Nature* **326**, 259-267.

Fire, A., Harrison, S. and Dixon, D. (1990). A modular set of *lacZ* fusion vectors for studying gene expression in *C. elegans*. *Gene* **93**, 189-198.

Freyd, G. 1991. Molecular analysis of the *C. elegans* lineage gene *lin-11*. Ph.D. thesis. MIT.

Golden, J. W. and Riddle, D. L. (1984). A pheromone-induced developmental switch in *Caenorhabditis elegans*: Temperature-sensitive mutants reveal a wild-type temperature-dependent process. *Proc. Natl. Acad. Sci. USA* **81**, 819-823.

Greenwald, I. S., Sternberg, P. S. and Horvitz, H.R. (1983). The *lin-12* locus specifies cell fates in *Caenorhabditis elegans*. *Cell* **34**, 435-444.

Herman, R. K. and Hedgecock, E. M. (1990). Limitation of the size of the vulval primordium of *Caenorhabditis elegans* by *lin-15* expression in surrounding hypodermis. *Nature* **348**, 169-171.

Hill, R. J. and Sternberg, P. W. (1992). The gene *lin-3* encodes an inductive signal for vulval development in *C. elegans*. *Nature* **358**, 470-476.

Honigberg, S. M. and Esposito, R. E. (1994). Reversal of cell determination in yeast meiosis: Postcommitment arrest allows return to mitotic growth. *Proc. Natl. Acad. Sci. USA* **91**, 6559-6563.

Horvitz, H. R. and Sternberg, P.W. (1991). Multiple intercellular signaling systems control the development of the *Caenorhabditis elegans* vulva. *Nature* **351**, 535-541.

Kim, S. K. and Horvitz, H. R. (1990). The *Caenorhabditis elegans* gene *lin-10* is broadly expressed while required specifically for the determination of vulval cell fates. *Genes Dev*. **4**, 357-371.

Kimble, J. (1981). Alterations in cell lineage following laser ablation of cells in the somatic gonad of *Caenorhabditis elegans*. *Dev. Biol.* **87**, 286-300.

Lo, D. C., Allen, F. and Brockes, J. P. (1993). Reversal of muscle differentiation during urodele limb regeneration. *Proc. Natl. Acad. Sci. USA* **90**, 7230-7234.

Liu, Z. and Ambros V. (1991). Alternative temporal control systems for hypodermal cell differentiation in *Caenorhabditis elegans*. *Nature* **350**, 162-165.

Riddle, D. L. (1988). The dauer larva. In *The Nematode Caenorhabditis elegans* (W. B. Wood, Ed.), pp. 393-412. New York: Cold Spring Harbor Laboratory Press.

Rohlf, F. J. and Sokal, R. R. (1981). *Statistical Tables.* New York: W. H. Freeman and Co.

Singh, R. N. and Sulston, J. E. (1978). Some observations on moulting in *Caenorhabditis elegans*. *Nematologica* **24**, 63-71.

Slack, J. M. W. (1983). *From Egg to Embryo.* Cambridge: Cambridge University Press.

Sokal, R. R. and Rohlf, F. J. (1981). *Biometry*. 2nd edition. San Francisco: W. H. Freeman and Co.

Sternberg, P. W. and Horvitz, H. R. (1986). Pattern formation during vulval development in *Caenorhabditis elegans*. *Cell* **44**, 761-772.

Sternberg, P. W. (1988). Lateral inhibition during vulval induction in *Caenorhabditis elegans. Nature* **335**, 551-554.

Sternberg, P. W. and Horvitz, H. R. (1989). The combined action of two intercellular signaling pathways specifies three cell fates during vulval induction in *C. elegans*. *Cell* **58**, 679-693.

Sulston, J. E. and Horvitz, H. R. (1977). Post-embryonic cell lineages of the nematode, *Caenorhabditis elegans*. *Dev. Biol.* **56**, 110-156.

Sulston, J. E. and White, J. G. (1980). Regulation and cell autonomy during postembryonic development of *Caenorhabditis elegans*. *Dev. Biol.* **78**, 577-597.

Wadsworth, W. G. and Riddle, D. L. (1988). Acidic intracellular pH shift during *Caenorhabditis elegans* larval development. *Proc. Natl. Acad. Sci. USA* **85**, 8435-8438.

Wilkinson, H. A. and Greenwald, I. (1995). Spatial and temporal patterns of *lin-12* expression during *C. elegans* hermaphrodite development. *Genetics* **141**, 513-526.

Wood, W. B. (1988). *The Nematode Caenorhabditis elegans*. (ed.). New York: Cold Spring Harbor Laboratory Press.

(Accepted 28 April 1996)